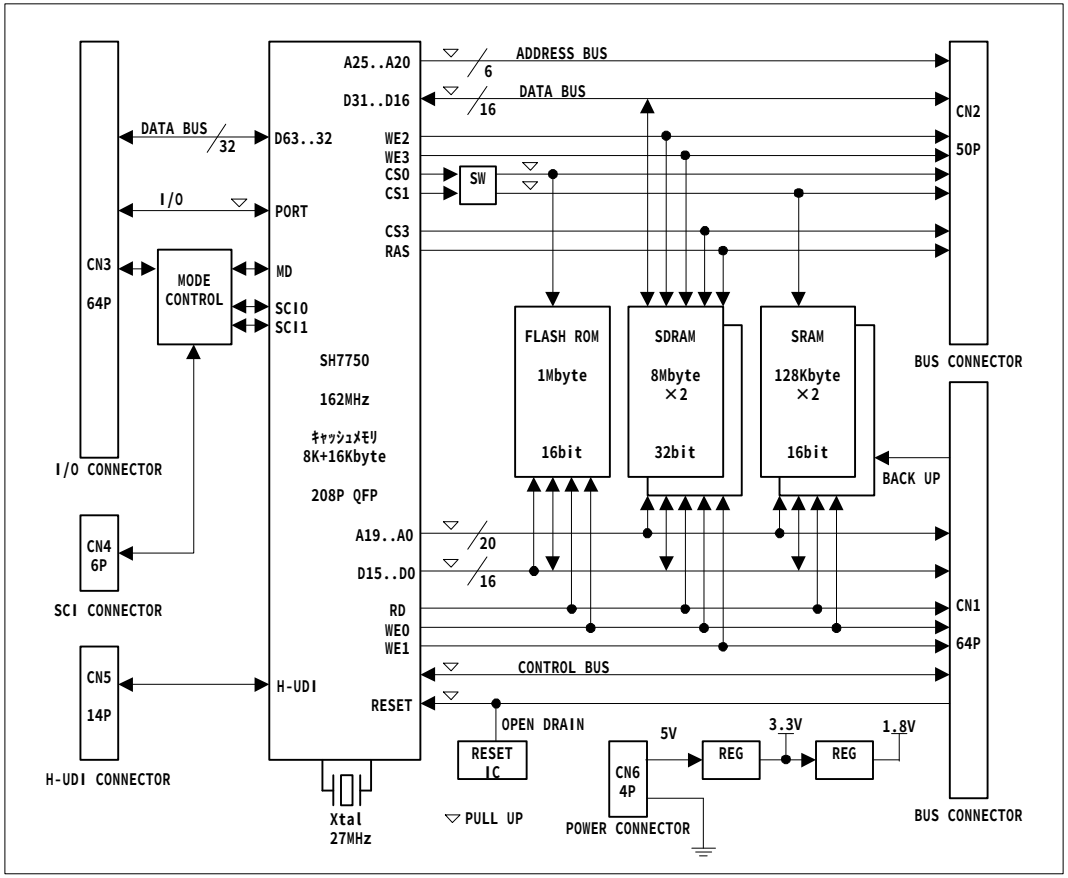
A25..A20
6
ADDRESS BUS
D31..D16
16
DATA BUS
CN2
50P
DATA BUS
32
D63..32
WE2
WE3
CS0
CS1
SW
I/O
PORT
CS3
RAS
CN3
64P
MODE CONTROL
MD
SCI0
SCI1
SH7750
162MHz
ｷｬｯｼｭﾒﾓﾘ
8K+16Kbyte
208P QFP
FLASH ROM
1Mbyte
16bit
SDRAM
8Mbyte
×2
32bit
SRAM
128Kbyte
×2
16bit
BUS CONNECTOR
I/O CONNECTOR
BACK UP
CN4
6P
SCI CONNECTOR
A19..A0
20
D15..D0
16
RD
WE0
WE1
CN1
64P
CN5
14P
H-UDI
CONTROL BUS
RESET
OPEN DRAIN
RESET IC
5V
REG
3.3V
REG
1.8V
CN6
4P
H-UDI CONNECTOR
Xtal
27MHz
PULL UP
POWER CONNECTOR
BUS CONNECTOR