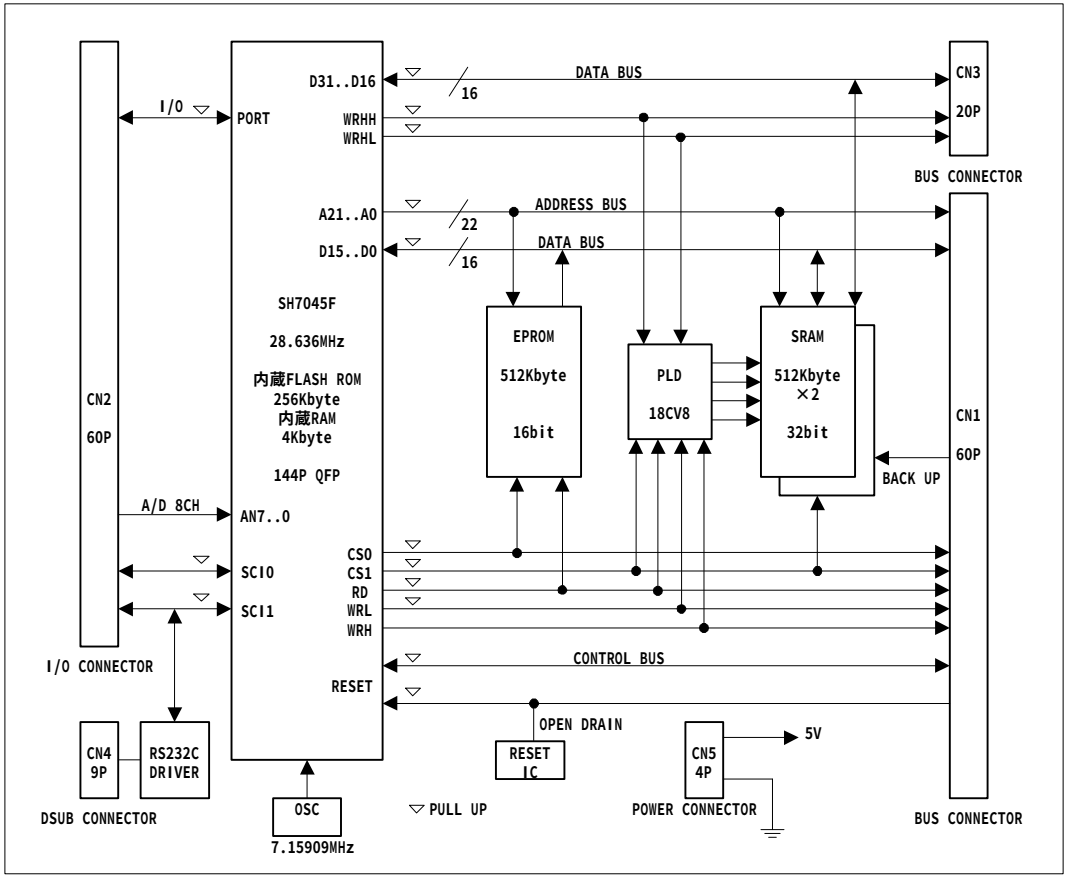
CN2
60P
I/O CONNECTOR
I/O
PORT
A/D 8CH
AN7..0
SCI0
SCI1
CN4
9P
DSUB CONNECTOR
RS232C
DRIVER
D31..D16
16
WRHH
WRHL
A21..A0
22
D15..D0
16
SH7045F
28.636MHz
内蔵FLASH ROM
256Kbyte
内蔵RAM
4Kbyte
144P QFP
CS0
CS1
RD
WRL
WRH
RESET
OSC
7.15909MHz
DATA BUS
ADDRESS BUS
DATA BUS
EPROM
512Kbyte
16bit
PLD
18CV8
SRAM
512Kbyte
×2
32bit
BACK UP
CONTROL BUS
OPEN DRAIN
RESET
IC
PULL UP
CN5
4P
POWER CONNECTOR
5V
CN3
20P
BUS CONNECTOR
CN1
60P
BUS CONNECTOR